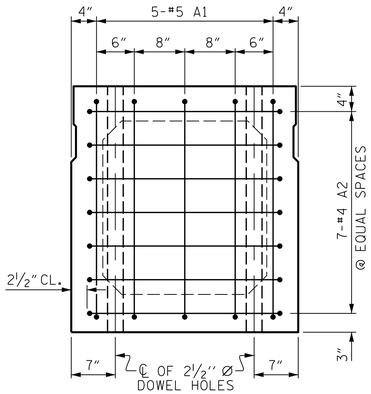

END ELEVATION

SHOWING PLACEMENT OF #5 & #4 "A" BARS AND LOCATION OF DOWEL HOLES. (INTERIOR BOX BEAM SECTION SHOWN-EXTERIOR SECTION SIMILAR EXCEPT SHEAR KEY LOCATION. STRAND LAYOUT NOT SHOWN.)

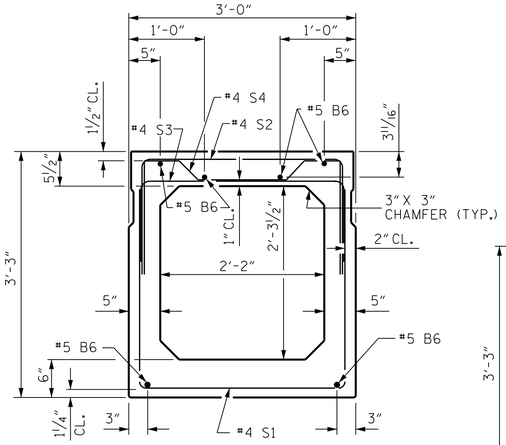

INTERIOR BOX BEAM SECTION

(STRAND LAYOUT NOT SHOWN)

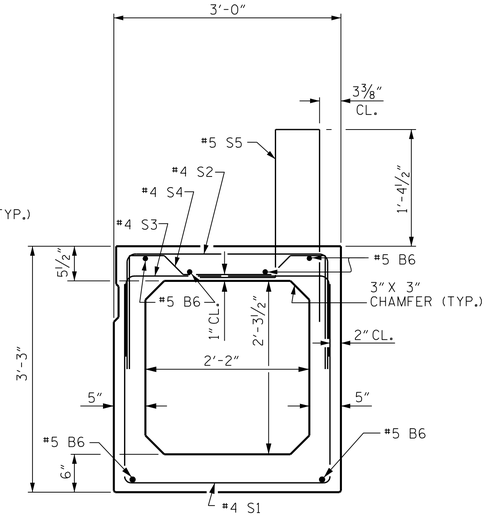

EXTERIOR BOX BEAM SECTION

(STRAND LAYOUT NOT SHOWN)

0.6" Ø LOW RELAXATION STRAND LAYOUT

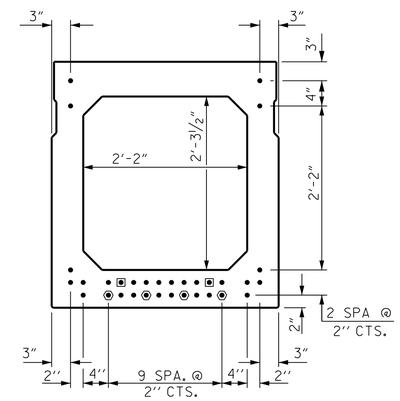

TYPICAL STRAND LOCATION

(32 STRANDS REQUIRED)

DEBONDING LEGEND

- ● FULLY BONDED STRANDS
- ◉ STRANDS DEBONDED FOR 4'-0" FROM END OF GIRDER
- ⬢ STRANDS DEBONDED FOR 12'-0" FROM END OF GIRDER

BOND SHALL BE BROKEN ON STRANDS AS SHOWN FOR THE SPECIFIED LENGTH FROM EACH END OF THE BOX BEAM. SEE STANDARD SPECIFICATIONS ARTICLE 1078-7.

BAR TYPES

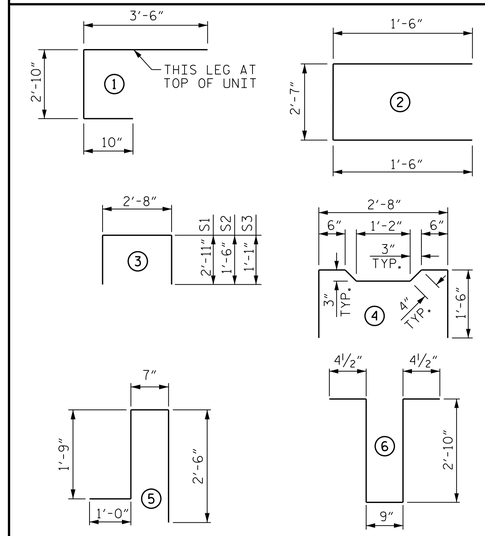

ALL BAR DIMENSIONS ARE OUT TO OUT

BILL OF MATERIAL FOR ONE BOX BEAM SECTION

BAR	NUMBER	SIZE	TYPE	EXTERIOR UNIT LENGTH	EXTERIOR UNIT WEIGHT	INTERIOR UNIT LENGTH	INTERIOR UNIT WEIGHT
A1	10	#5	1	7'-2"	75	7'-2"	75
A2	44	#4	2	5'-7"	164	5'-7"	164
B6	12	#5	STR	50'-11"	637	50'-11"	637
K1	15	#4	6	7'-2"	72	7'-2"	72
K2	10	#4	STR	2'-7"	17	2'-7"	17
S1	81	#4	3	8'-6"	460	8'-6"	460
S2	81	#4	3	5'-8"	307	5'-8"	307
S3	141	#4	3	4'-10"	455	4'-10"	455
S4	60	#4	4	5'-10"	234	5'-10"	234
✳ S5	138	#5	5	5'-10"	840	--	--
REINFORCING STEEL				2421	LBS.	2421	LBS.
✳ EPOXY COATED REINF. STEEL				840	LBS.		
7500 P.S.I. CONCRETE				19.6	CU. YDS.	19.4	CU. YDS.
0.6" Ø L.R. STRANDS				No. 32		No. 32	

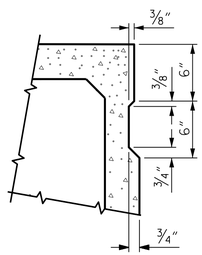

SHEAR KEY DETAIL

NOTE: OMIT SHEAR KEY ON OUTSIDE FACE OF EXTERIOR BOX BEAMS.

GRADE 270 STRANDS

	0.6" Ø L.R.
AREA (SQUARE INCHES)	0.217
ULTIMATE STRENGTH (LBS. PER STRAND)	58,600
APPLIED PRESTRESS (LBS. PER STRAND)	43,950

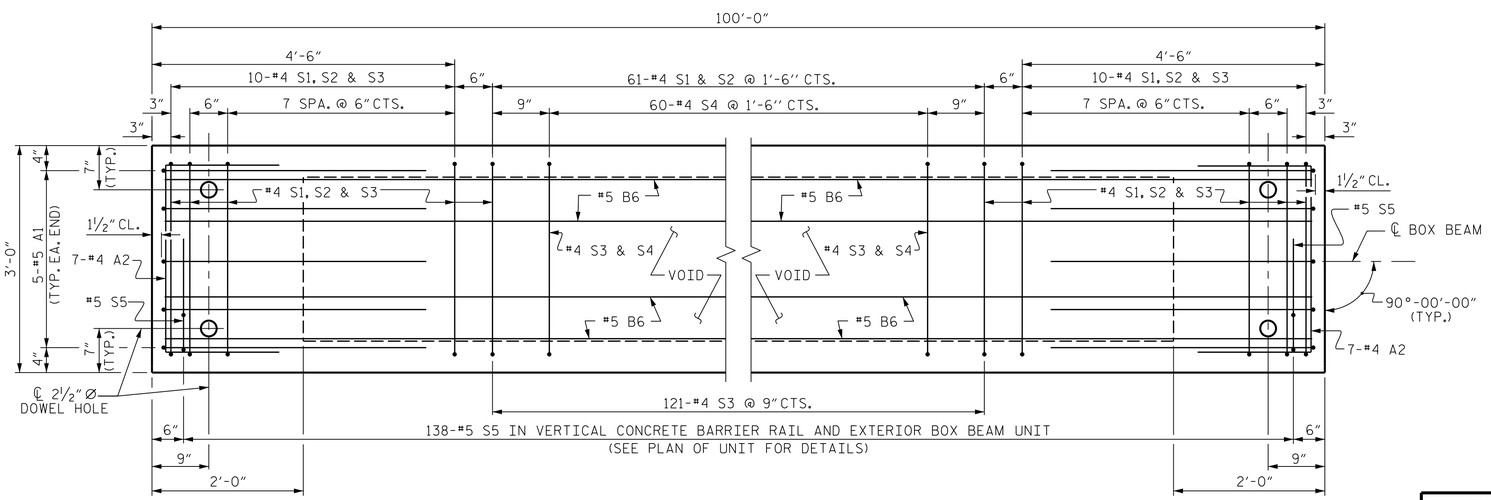

PLAN OF BOX BEAM

EXTERIOR UNIT SHOWN, INTERIOR UNIT SIMILAR EXCEPT OMIT #5 S5 BARS.
FOR LOCATION OF DIAPHRAGMS, SEE "PLAN OF UNIT".
FOR THREADED INSERTS, SEE "THREADED INSERT DETAIL".
FOR REINFORCING STEEL IN DIAPHRAGMS, SEE "DOUBLE DIAPHRAGM DETAILS".

PROJECT NO. 17BP.8.R.123
RICHMOND COUNTY
STATION: 15+92.00 -L-

SHEET 3 OF 5

STATE OF NORTH CAROLINA
DEPARTMENT OF TRANSPORTATION
RALEIGH

STANDARD

3'-0" X 3'-3"
PRESTRESSED CONCRETE
BOX BEAM UNIT

NORTH CAROLINA PROFESSIONAL SEAL 24939 ENGINEER BYRON E. ATKINSON
4/18/2018

DOCUMENT NOT CONSIDERED FINAL UNLESS ALL SIGNATURES COMPLETED

MI ENGINEERING
1011 SCHAUB DRIVE, SUITE 100
RALEIGH, NC 27606
(919) 851-6606
FIRM PE NUMBER : P-0671

ASSEMBLED BY:	B.E. LANNING	DATE: 01/18
CHECKED BY :	B.E. ATKINSON	DATE: 02/18
DESIGN ENGINEER OF RECORD:	B.E. ATKINSON	DATE: 02/18
DRAWN BY : DGE II/11	REV. 9/14	MAA/TMG
CHECKED BY : TMG II/11		

REVISIONS							SHEET NO.
NO.	BY:	DATE:	NO.	BY:	DATE:		S-6
1			3				TOTAL SHEETS
2			4				15

STD. NO. 39PCBB6_90S_100L

4/18/2018
11:01:03 AM
User: blanning
Filename: P:\NC Bridges\MI6006_CH Eng.Div.8 Br.Repl.I5 Bridges\MI6006.03_Richmond 64\17BP8R123\Structures\401_011_17BP8R123_SMU_BBU3.dgn