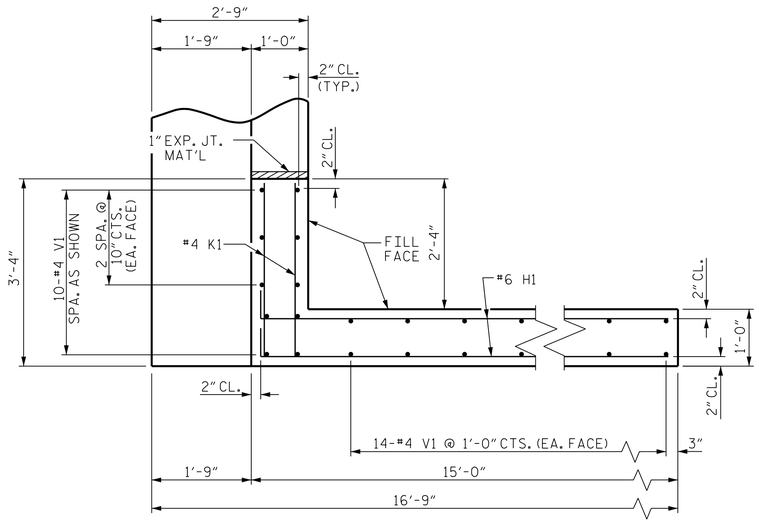

PLAN OF WING (W1)

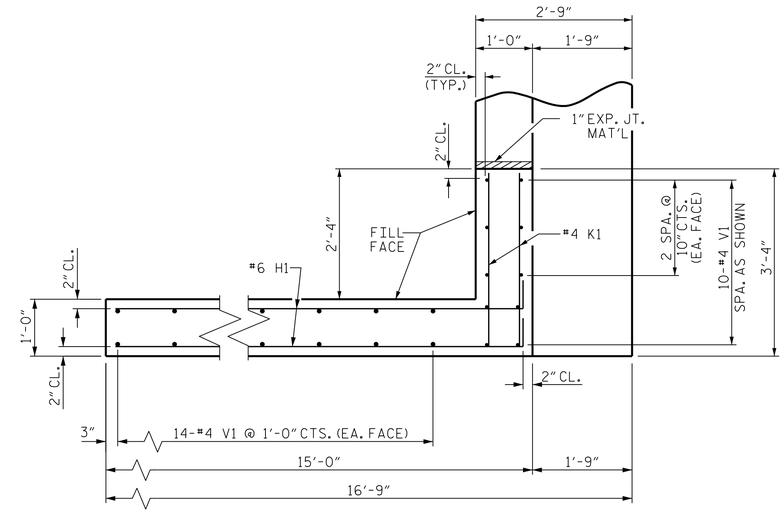

PLAN OF WING (W2)

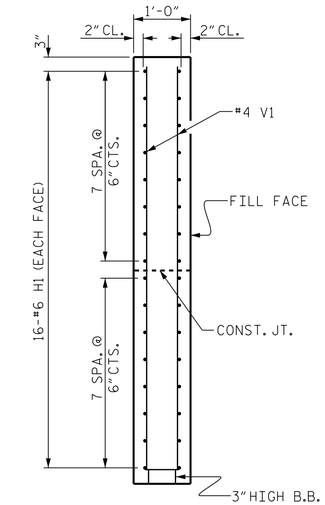

SECTION X-X

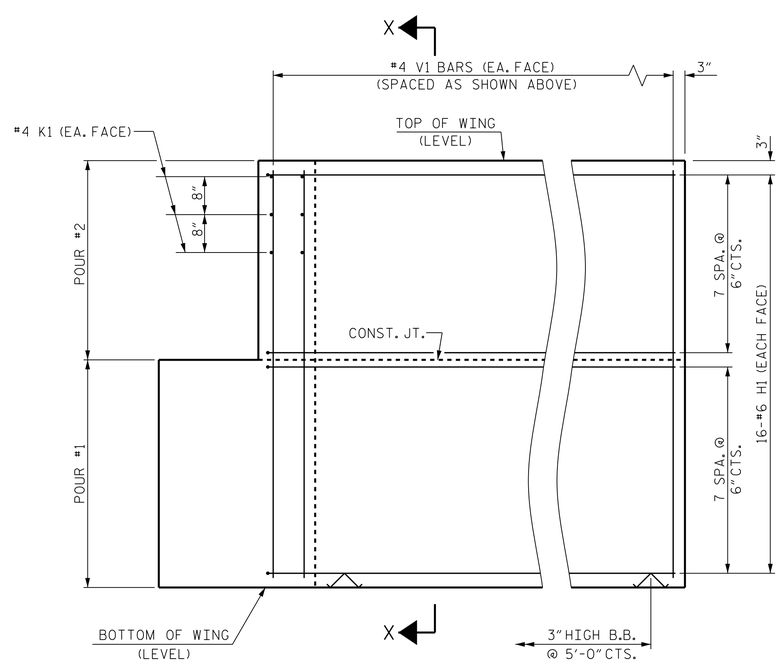

ELEVATION OF WING (W1)

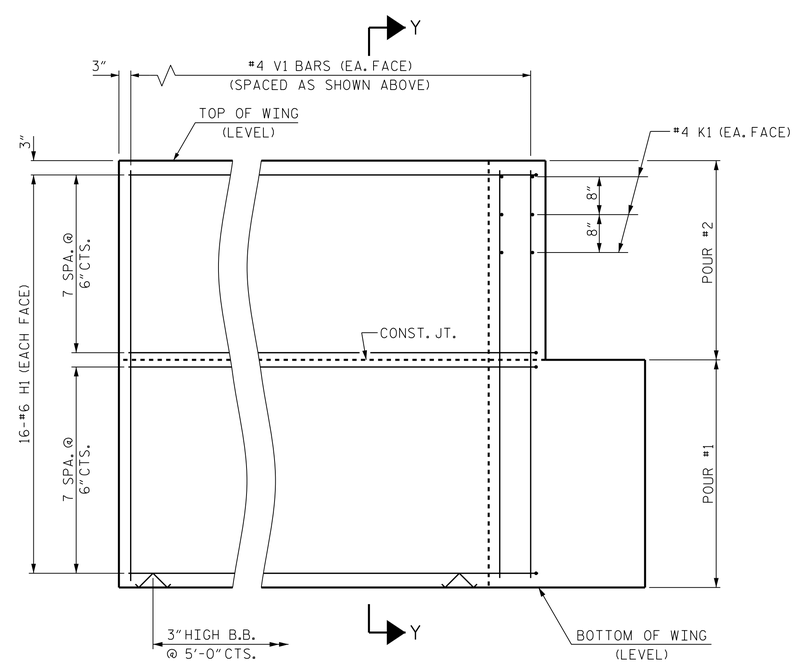

ELEVATION OF WING (W2)

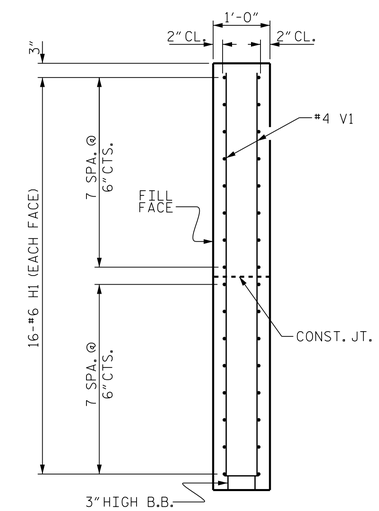

SECTION Y-Y

WING DETAILS

PROJECT NO. 17BP.8.R.123

RICHMOND COUNTY

STATION: 15+92.00 -L-

SHEET 3 OF 4

STATE OF NORTH CAROLINA
DEPARTMENT OF TRANSPORTATION
RALEIGH

SUBSTRUCTURE

END BENT
WING DETAILS

NORTH CAROLINA PROFESSIONAL SEAL 24939 ENGINEER BYRON E. ATKINSON
4/18/2018

DOCUMENT NOT CONSIDERED FINAL UNLESS ALL SIGNATURES COMPLETED

MI ENGINEERING
1011 SCHAUB DRIVE, SUITE 100
RALEIGH, NC 27606
(919) 851-6606
FIRM PE NUMBER : P-0671

ASSEMBLED BY: B.E. LANNING		DATE: 01/18
CHECKED BY : B.E. ATKINSON		DATE: 02/18
DESIGN ENGINEER OF RECORD: B.E. ATKINSON		DATE: 02/18
DRAWN BY : WJH 12/11	REV. 4/15	MAA/TMG
CHECKED BY : AAC 12/11		

REVISIONS						SHEET NO.
NO.	BY:	DATE:	NO.	BY:	DATE:	S-12
1			3			TOTAL SHEETS
2			4			15

STD. NO. EB_33_90S4_39BB

4/18/2018
11:01:16 AM
User: blanning
Filename: P:\NC Bridges\MI6006_CH Eng_Div. 8 Br. Repl. I5 Bridges\MI6006.03_Richmond 64\17BP8R123\Structures\401_023_17BP8R123_SMU_EB3.dgn