DocuSign Envelope ID: 2ABA3369-F8FA-4045-B236-DFA89C9D23EC

| PROJECT REFERENCE NO. | SHEET NO. |
|---|---|
| 17BP.8.R.123 | 2C-1 |

**DOCUMENT NOT CONSIDERED FINAL UNLESS ALL SIGNATURES COMPLETED**

STATE OF NORTH CAROLINA
DEPT. OF TRANSPORTATION
DIVISION OF HIGHWAYS
RALEIGH, N.C.

ROADWAY DETAIL DRAWING FOR
**GUARDRAIL INSTALLATION**

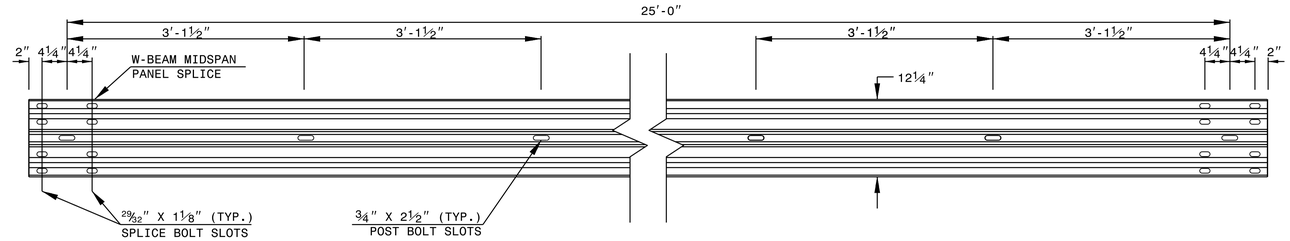


## STANDARD W-BEAM GUARDRAIL

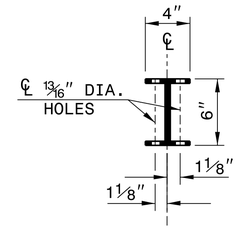


## PLAN

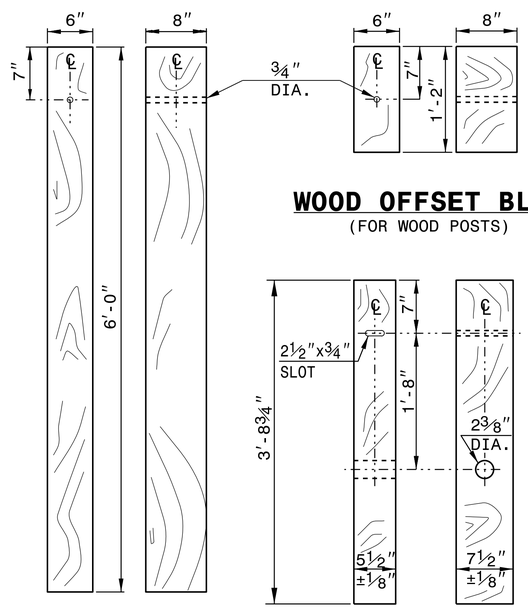


## STANDARD LINE POST

## WOOD OFFSET BLOCK
(FOR WOOD POSTS)

## SHORT WOOD BREAKAWAY POST

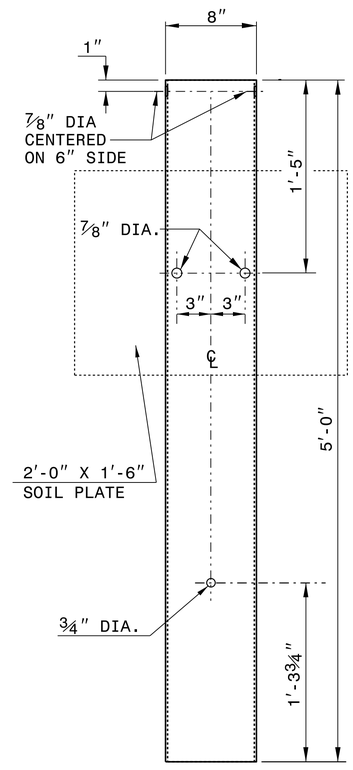


## STEEL TUBE
TS 6"x8"x0.1875"

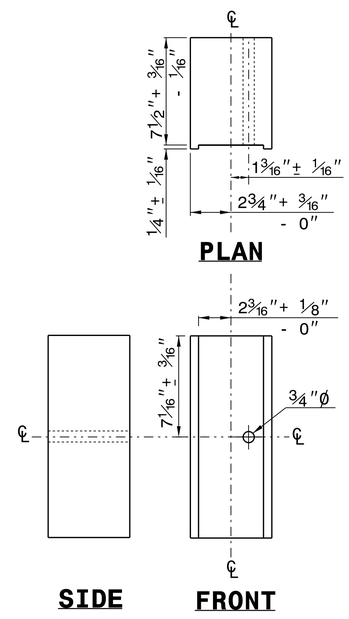


## PLAN

## SIDE FRONT

## ROUTED OFFSET BLOCK

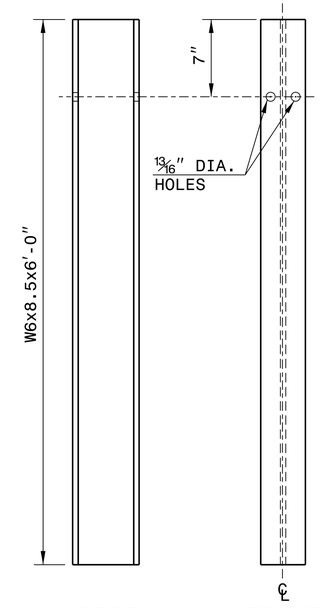


## SIDE FRONT

## "W6" STEEL POST

# SYSTEM PARTS

STATE OF NORTH CAROLINA
DEPT. OF TRANSPORTATION
DIVISION OF HIGHWAYS
RALEIGH, N.C.

ROADWAY DETAIL DRAWING FOR
**GUARDRAIL INSTALLATION**

SHEET 6 OF 8
**862D02**

SHEET 6 OF 8
**862D02**

NORTH CAROLINA PROFESSIONAL SEAL 022966 ENGINEER JOHN S. HOWERTON

DocuSigned by: 673F3D17DCDC45F...
4/18/2018

**CONTRACTS STANDARDS AND DEVELOPMENT UNIT**
Office 919-707-6950 FAX 919-250-4119

**SEE TITLE BLOCK**

ORIGINAL BY: J.HOWERTON DATE: 3-7-2018
MODIFIED BY: DATE:
CHECKED BY: DATE:
FILE SPEC.: