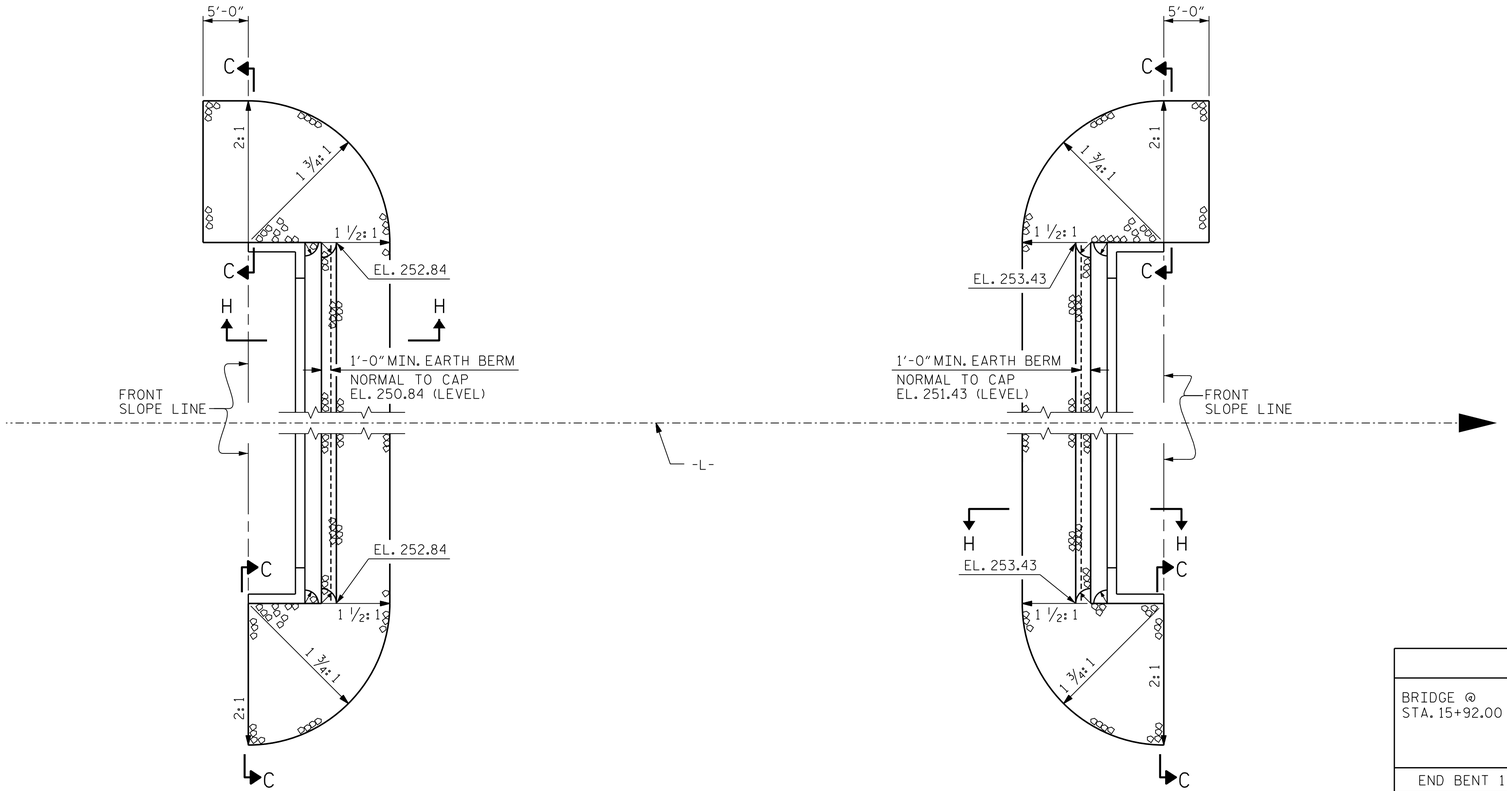

END BENT 1

PLAN

END BENT 2

ESTIMATED QUANTITIES		
BRIDGE @ STA. 15+92.00 -L-	RIP RAP CLASS II (2'-0" THICK)	GEOTEXTILE FOR DRAINAGE
	TONS	SQUARE YARDS
END BENT 1	209	232
END BENT 2	206	229

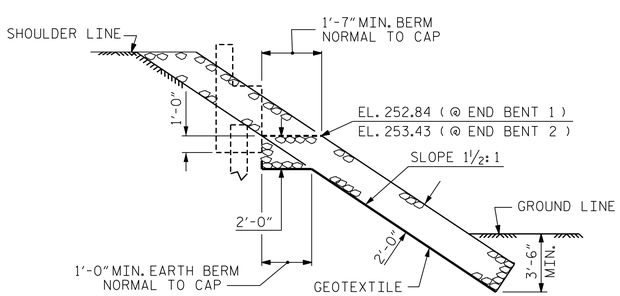

SECTION H-H

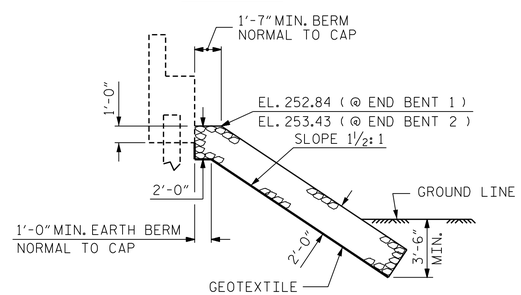

℄ SECTION
BERM RIP RAPPED

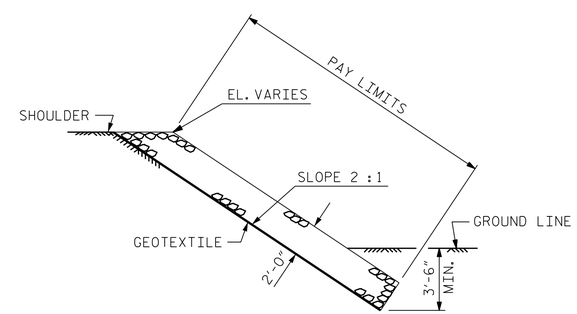

SECTION C-C

PROJECT NO. 17BP.8.R.123
RICHMOND COUNTY
STATION: 15+92.00 -L-

STATE OF NORTH CAROLINA
DEPARTMENT OF TRANSPORTATION
RALEIGH

STANDARD

RIP RAP DETAILS

NORTH CAROLINA PROFESSIONAL SEAL 24939 ENGINEER BYRON E. ATKINSON
4/18/2018

DOCUMENT NOT CONSIDERED FINAL UNLESS ALL SIGNATURES COMPLETED

MI ENGINEERING
1011 SCHAUB DRIVE, SUITE 100
RALEIGH, NC 27606
(919) 851-6606
FIRM PE NUMBER : P-0671

REVISIONS						
NO.	BY:	DATE:	NO.	BY:	DATE:	
1			3			
2			4			

SHEET NO. S-14
TOTAL SHEETS 15

STD. NO. RR1 (Sht 2)

ASSEMBLED BY:	B.E. LANNING	DATE:	01/18
CHECKED BY :	B.E. ATKINSON	DATE:	02/18
DESIGN ENGINEER OF RECORD:	B.E. ATKINSON	DATE:	02/18
DRAWN BY : REK 1/84	REV. 5/1/06R	TLA/GM	
CHECKED BY : RDU 1/84	REV. 10/1/11	MAA/GM	
	REV. 12/21/11	MAA/GM	

4/18/2018
11:01:20 AM
User: blanning
Filename: P:\NC Bridges\MI6006_CH Eng.Div.8 Br. Repl. I5 Bridges\MI6006.03_Richmond 64\17BP8R123\Structures\401_027_17BP8R123_SMU_RR1.dgn